# Electrical Control Box
## PS-CB-001-SP/3P-XX

The Model **PS-CB-001-SP/3P-XX** is a control box consisting of electrical contractors that could be wired either to connect a single phase or three phase loads. These control boxes, meant for using for door applications, could be configured to operate single/three phase loads (25 amps per phase as a standard fitting) enables interfacing with activation. It is also provided with suitable industrial grade terminations to take a proper electrical load.

Fig 2. Give a brief idea of the control box and its terminations.

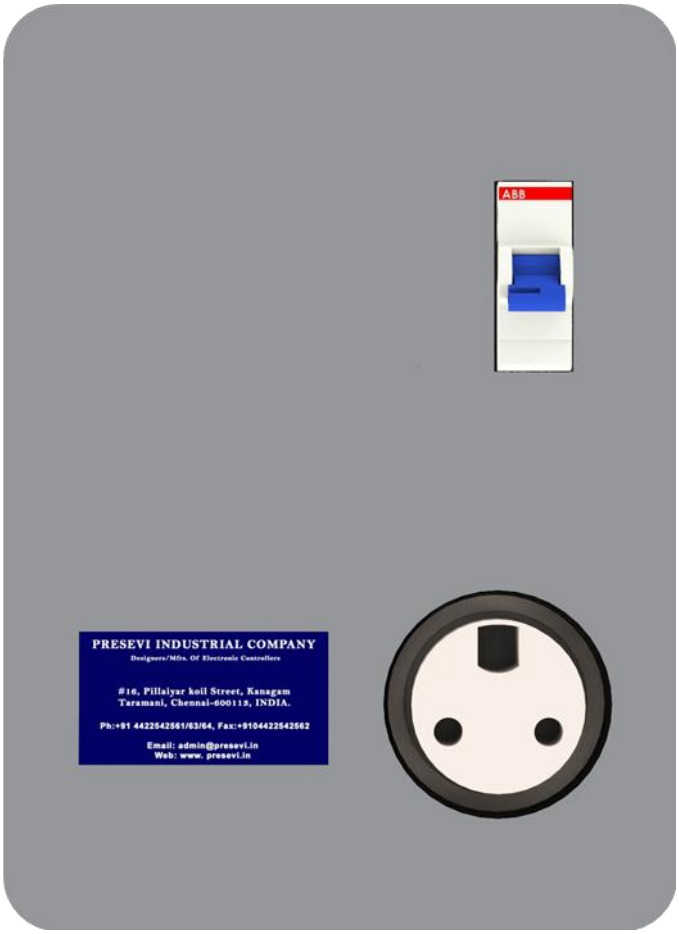


**Fig.1** Electrical Control Box

## Product Highlights

- Provision to interface external gadgets like Motion detectors, Timer switches
- Switching the loads up to 25A /phase
- Single/three phase operation
- Both direct as well as MCB operated switching provided

## Applications

- Conference rooms
- Lecture halls
- Machine loads

## Mechanical dimensions

L × B × H (in mm) : 240 × 220 × 71

## Connection diagram

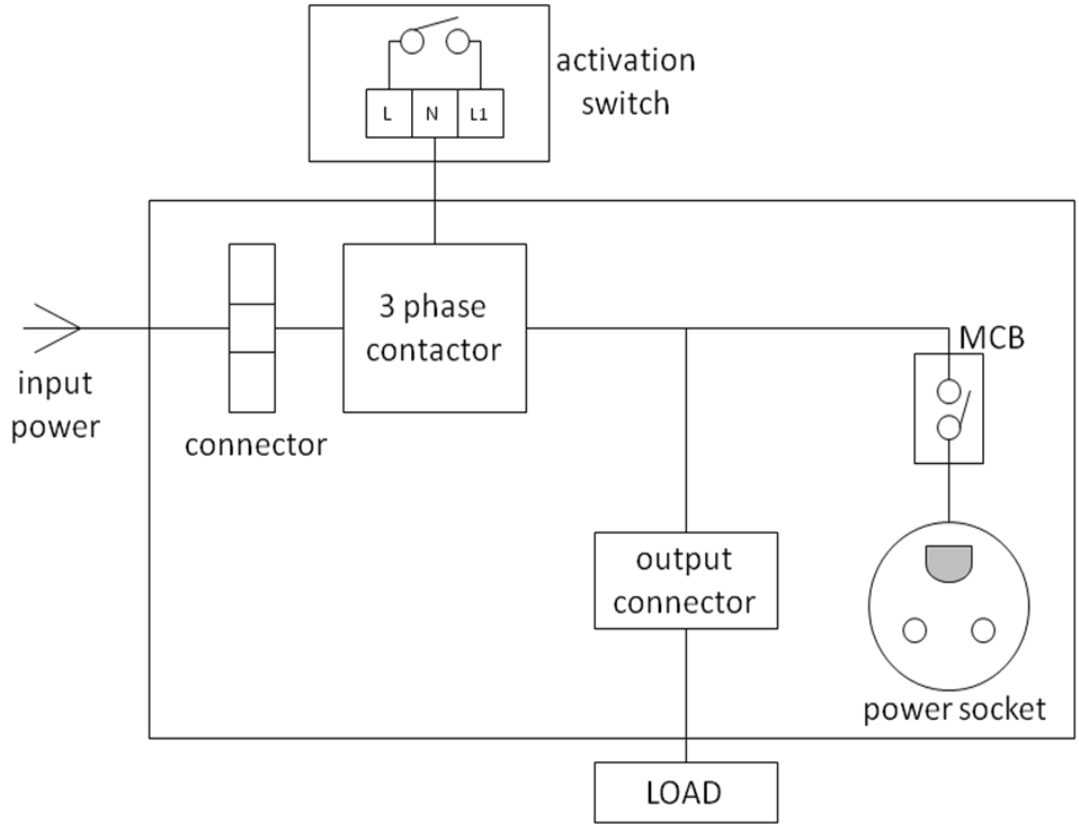


**Activation switch – Motion detector/RTC Timers/keytag switches/Door sensors*

**Fig.2** Connection diagram of an electrical control box

## Electrical specifications

| Input Voltage (V AC) | | | Frequency (Hz) | | | Output relay rating |
|---|---|---|---|---|---|---|
| Min. | Typ | Max. | Min. | Typ | Max. | Max |
| 180 | 220 | 270 | 45 | 50 | 55 | 20A, 250V AC |

**Notes & Abbreviations**

RTC – Real Time Clock

**The specifications, designs and information in this brochure are subject to change without notice**